FLAME

Modular GAS deck oven.
The combined arrangement of burners and Activestone technology

PIZZAGROUP

FLAME

PIZZAGROUP

High productivity at low consumption.

This professional gas oven specifically designed for pizzerias is extremely popular and suited to a wide range of locations. User-friendliness, guaranteed energy savings and uncompromising performance make it the oven of choice for many a chef and pizza-makers. **A special burner layout and Activestone technology combine to generate heat quickly, ensuring uniform cooking throughout the chamber, saving both time and energy.**

The Flame gas oven is certified and tested annually.

GENERAL FEATURES

Burning Technology
Specially shaped steel deflectors convey heat to the perforated roof of the chamber and, by radiation, onto the pizza. This special burner arrangement generates heat according to a **convective motion**, typical of wood-fired baking. With **Flame** it is possible to **replicate the dynamics and baking of a wood-fired oven**, **without charcoal** and without the inconvenience of wood-fired baking such as cleaning and food contamination.

800 °F (426 °C) max temperature. Perfect for any dough, also high hydrations products requiring a very short cook time, like Napoli-style pizza.

Safety
The ignition, no pilot light.

Cooking chamber
Chamber height 5.9″.

Refractory Stone
More crispy and long lasting results.
Bake any product directly on the stone without the need to use trays or pans.

Made completely in stainless steel for long lasting life working 24/7

Warranty: 1 year parts and labour

Mandatory gas regulator each ovens 3/4″

Safety thermostat

Easy to clean, user and Service friendly

Counter balanced doors

Double glass door

Armored electric elements

Intertek 5023358 **CONFORMS TO NSF/ANSI STD 4**

Intertek 5023358 **CONFORMS TO ANSI STD Z83.11 CERTIFIED TO CSA STD 1.8**

Specially shaped steel deflectors convey the heat towards the perforated chamber roof and, by irradiation, onto the pizza. This recreates the dynamics of a wood-fired oven but without using charcoal and in complete safety.

www.pizzagroupusa.com

4540 Kendrick Plaza Dr suite 130
Houston, TX 77032, United States

FLAME

PIZZAGROUP

TECHNICAL DATA - OVENS

	FLAME 4 ETL	FLAME 6 ETL	FLAME 6L ETL	FLAME 9 ETL
EXTERNAL DIMENSIONS LxWxH	113x107x63 cm 44.5"x42"x25"	113x145x63 cm 44.5"x57.5"x25"	147x91x71 cm 58"x36"x28"	147x140x71 cm 58"x55"x28"
INTERNAL DIMENSIONS LxWxH	70x70x15 cm 27.6"x27.6"x5.9"	70x105x15 cm 27.6"x41.3"x5.9"	105x70x15 cm 41.3"x27.6"x5.9"	105x105x15 cm 41.3"x41.3"x5.9"
WEIGHT KG | LB	132 | 291	164 | 361	164 | 361	196 | 432

TECHNICAL DATA - STANDS

DIMENSIONS LxWxH	113x89x106 cm 44"x35"x41.7"	113x124x106 cm 44"x49"x41.7"	148x89x106 cm 58"x35"x41.7"	148x124x106 cm 58"x49"x41.7"
WEIGHT KG | LB	34 | 75	40 | 88	42 | 93	42 | 93

GAS SPECS	FLAME 4 ETL	FLAME 6 ETL	FLAME 6L ETL	FLAME 9 ETL
Gas Type	Natural or Propane	Natural or Propane	Natural or Propane	Natural or Propane
Gas pipe inlet x deck	3/4	3/4	3/4	3/4
Mandatory Gas Regulator at oven	Regulator 20 or 30 mBar	Regulator 20 or 30 mBar	Regulator 20 or 30 mBar	Regulator 20 or 30 mBar
Gas version: power (BTU/h)	45000 Btu/hr	62000 Btu/hr	65100 Btu/hr	90000 Btu/hr

NOTE

Safety chains must connect the oven to the wall to prevent it from moving. Anchoring must be done by the customer.
The length of the safety chain must prevent the flexible hoses from straightening. Safety chains are not included with the oven.
The gas hose does not come with the oven. The customer must purchase one and have it available on site for the installation day.

Minimum 4 Inches of clearance is required on all sides of the oven. At any time and without any notice the Manufacturer reserves the right of implementing all useful and necessary modifications for products improvements.

4540 Kendrick Plaza Dr suite 130
Houston, TX 77032, United States

FLAME

PIZZAGROUP

SIZE AND CONFIGURATION

FLAME 4 ETL

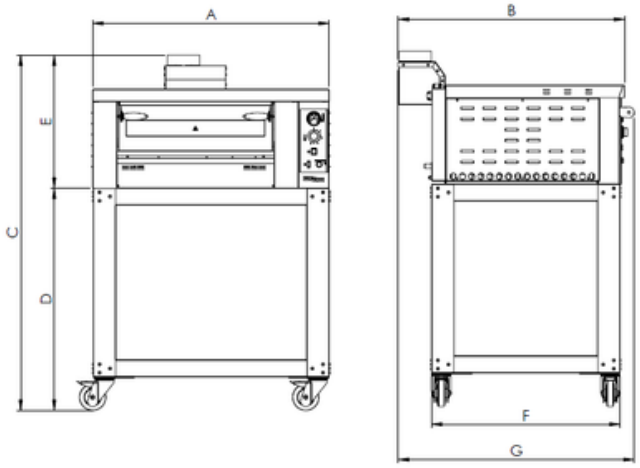

FLAME 6 ETL

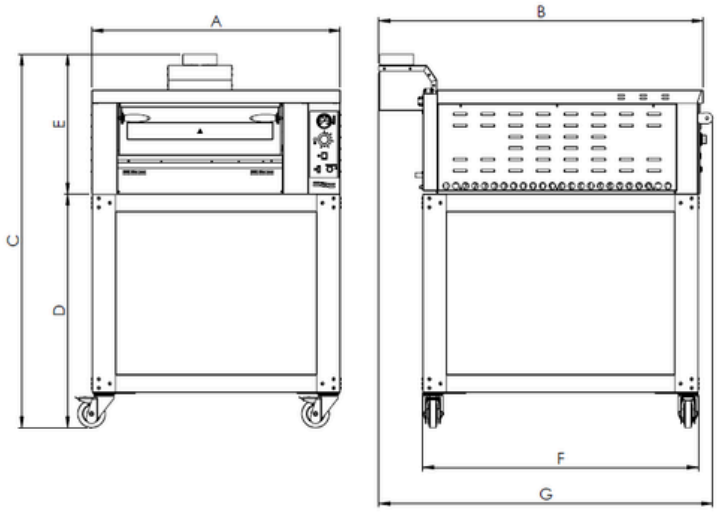

FLAME 6L ETL

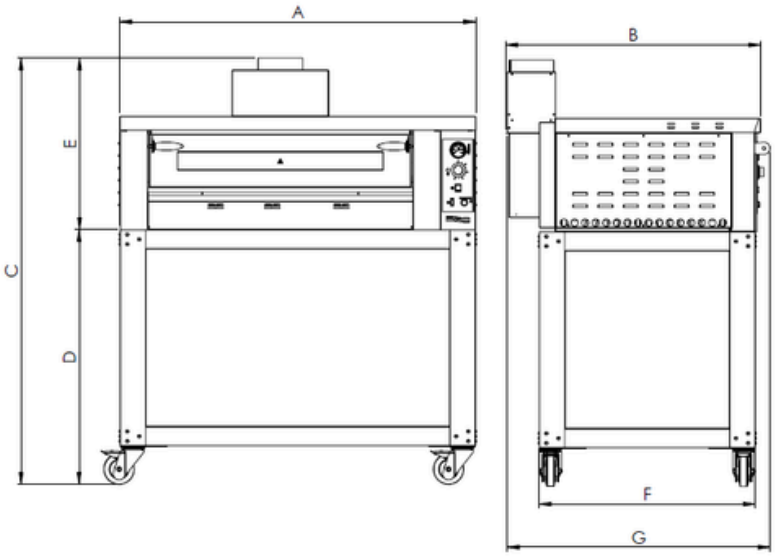

FLAME 9 ETL

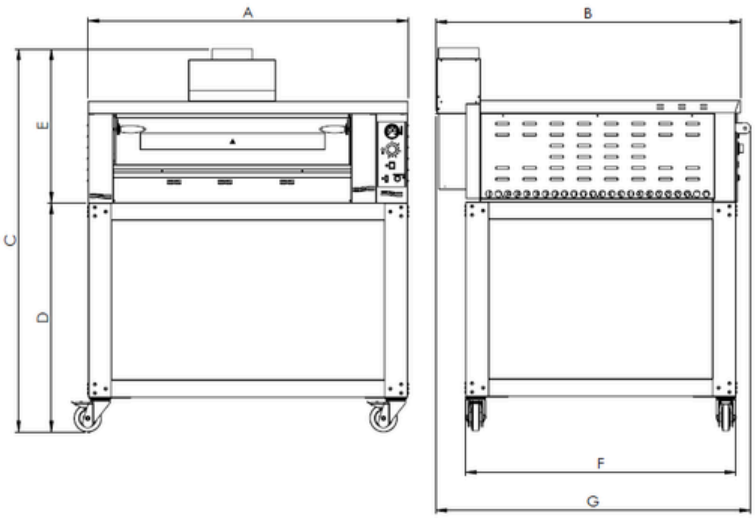

EXTERNAL DIMENSIONS

Model	A	B	C	D	E	F	G
FLAME 4 ETL	44.2″ 112 cm	42.5″ 108 cm	66.1″ 168 cm	41.7″ 106 cm	24.8″ 63 cm	35.2″ 89 cm	44.1″ 112 cm
FLAME 6 ETL	44.2″ 112 cm	57.9″ 147 cm	66.1″ 168 cm	41.7″ 106 cm	24.8″ 63 cm	49″ 124 cm	59″ 150 cm
FLAME 6L ETL	57.9″ 147 cm	41.4″ 105 cm	69.3″ 176 cm	41.7″ 106 cm	28″ 71 cm	35.2″ 89 cm	42.9″ 109 cm
FLAME 9 ETL	57.9″ 147 cm	55.1″ 140 cm	69.3″ 176 cm	41.7″ 106 cm	28″ 71 cm	49″ 124 cm	57.1″ 145 cm

FLAME

PIZZAGROUP

INSTALLATION

ONLY FOR 6L AND 9 MODELS

Connection to chimney

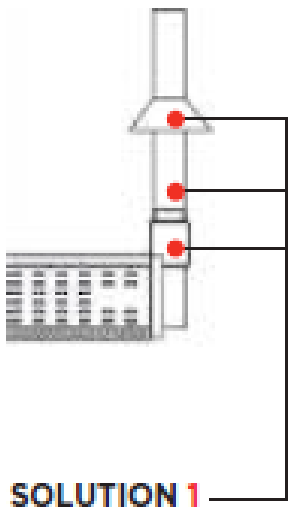

FOR B11 INSTALLATION

CODE
SOLUTION 1

Ventilation in hood

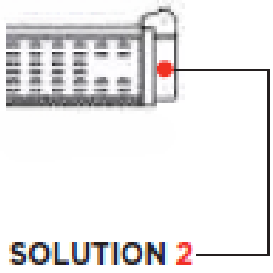

FOR B21 INSTALLATION

CODE
SOLUTION 2

4540 Kendrick Plaza Dr suite 130
Houston, TX 77032, United States

FLAME

PIZZAGROUP

OTHER INFORMATION
INSTALLATION SPECIFICATIONS

A pizza/baking specialist will set the oven for your production needs (on request).
All oven parts can fit through a standard 36"x80" door.

Installation phases require 4 - 6 hours / Ventilation hook-ups are at the customer's responsibility and expense / Installation must be carried out by the proper trade professionals and in accordance to local regulations / As for ventilation requirements, a specialist is required / A certified plumber is required on site during installation phases.

ELECTRICAL REQUIREMENTS	FLAME 4 ETL	FLAME 6 ETL	FLAME 6L ETL	FLAME 9 ETL
Voltage **Phase**	120 V 1 PH	120 V 1 PH	120 V 1 PH	120 V 1 PH
Kw	0.1	0.1	0.1	0.1
Frequency	60 Hz	60 Hz	60 Hz	60 Hz
Gas Supply	Natural Gas 20 mBar	Natural Gas 20 mBar	Natural Gas 20 mBar	Natural Gas 20 mBar
Gas Supply	LPG Gas 30 mBar	LPG Gas 30 mBar	LPG Gas 30 mBar	LPG Gas 30 mBar

SHIPPING INFORMATION	Packaging LxWxH	Packaging Weight
Flame 4 ETL	130x120x72 cm 51"x47.5"x28.5"	195 kg | 430 lb
Flame 6 ETL	160x160x72 cm 63"x63"x28.5"	250 kg | 551 lb
Flame 6L ETL	160x120x72 cm 63"x47.5"x28.5"	245 kg | 540 lb
Flame 9 ETL	160x160x72 cm 63"x63"x28.5"	280 kg | 617 lb
Stand for Flame 4 ETL	112x93x12.5 cm 44"x37"x5"	54.5 kg | 120 lb
Stand for Flame 6 ETL	112x126x15 cm 44"x50"x6"	62 kg | 137 lb
Stand for Flame 6L ETL	148x91x15 cm 58.5"x36"x6"	63 kg | 139 lb
Stand for Flame 9 ETL	143x122x15 cm 56.5"x48"x6"	75 kg | 165 lb